AHP-690 | Air Conditioner/Heat Exchanger

Air Cooled
Through Mounted
Nema-12, 4, 4X

24 VDC
467 BTU/HR



FEATURES

- Compact (only 10" X 6" X 8.5")
- Mounts and operates in any orientation: horizontal, vertical, etc.
- Low vibration and noise
- No moving parts except fans
- Environmentally safe
- No compressor, fluorocarbons or filters
- Virtually maintenance-free operation
- Stainless steel exterior housing
- Efficient heat exchanger mode (ECO-Mode)
- Easy to use Pivot Clean feature
- Weight 15 LBS.

CONTROL TEMPERATURES

Active Cooling	35 °C
Heat Exchanger (ECO-Mode)	25 °C
Active Heating	10 °C
Typical Hysteresis	5 °C
Operating Ambient	-40/+70 °C
Operating Enclosure	-10/+60 °C

POWER INPUTS

Voltage	24 VDC
Current, Active	14 AMPS
Current, ECO-Mode	0.5 AMPS

PERFORMANCE RATINGS

Cooling (Traditional)	467 BTU/HR
Cooling (Din 3168)	137 WATTS
Cooling COP (at L35 L35)	0.52
Heating (Traditional)	> 900 BTU/HR
Heating (Din 3168)	> 264 WATTS
Heating COP	> 1.0

INCLUDES

- Temperature controller
- Mounting gasket
- Mounting hardware
- Power input leads
- Power saving heat exchanger mode (ECO-Mode)

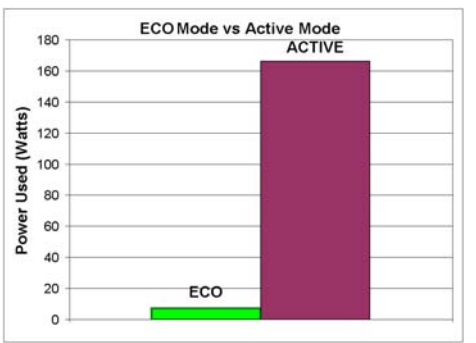

CONFIGURATIONS

MODEL	PART NUMBER	NOTES	TEMPERATURE CONTROL	ENVIRONMENT
AHP-690	0-M0J5-0-000	Cool only, industrial fans	TC-4F	NEMA-12, IP 52
AHP-690HC	0-M095-1-000	Heat/Cool, industrial fans	None*	NEMA-12, IP 52
AHP-690HC	0-M0I5-1-000	Heat/Cool, industrial fans	TC-7F	NEMA-12, IP 52
AHP-690XE	0-M0J5-4-000	Cool only, sealed hot side fan	TC-4F	NEMA-4/4X, IP 56
AHP-690XEHC	0-M095-5-000	Heat/Cool, sealed hot side fan	None*	NEMA-4/4X, IP 56
AHP-690XEHC	0-M0I5-5-000	Heat/Cool, sealed hot side fan	TC-7F	NEMA-4/4X, IP 56
AHP-690X	0-M0J5-2-000	Cool only, Mil. grade hot side fan	TC-4F	NEMA-4X/Harsh Env. IP 56
AHP-690XHC	0-M095-3-000	Heat/Cool, Mil. grade hot side fan	None*	NEMA-4X/Harsh Env. IP 56
AHP-690XHC	0-M0I5-3-000	Heat/Cool, Mil. grade hot side fan	TC-7F	NEMA-4X/Harsh Env. IP 56
AHP-690XM	0-M0J5-2-001	Cool only, Mil. grade fans	TC-4F	NEMA-4X/Harsh Env. IP 56
AHP-690XMHC	0-M095-3-001	Heat/Cool, Mil. grade fans	None*	NEMA-4X/Harsh Env. IP 56
AHP-690XMHC	0-M0I5-3-001	Heat/Cool, Mil. grade fans	TC-7F	NEMA-4X/Harsh Env. IP 56

* For controller options contact TECA; Heating function via reverse polarity (controller dependent)

Air Conditioner - Air Cooled

AHP-690

MOUNTING STYLE

Through Mounted

ENVIRONMENTS SERVED

NEMA-12 IP 52

NEMA-4,4X IP 56

RATING (TRADITIONAL)

467 BTU/hr @ 0 °F ΔT

570 BTU/hr @ +20 °F ΔT

RATING (DIN 3168)

137 Watts L35 L35

101 Watts L35 L50

PERFORMANCE CURVE

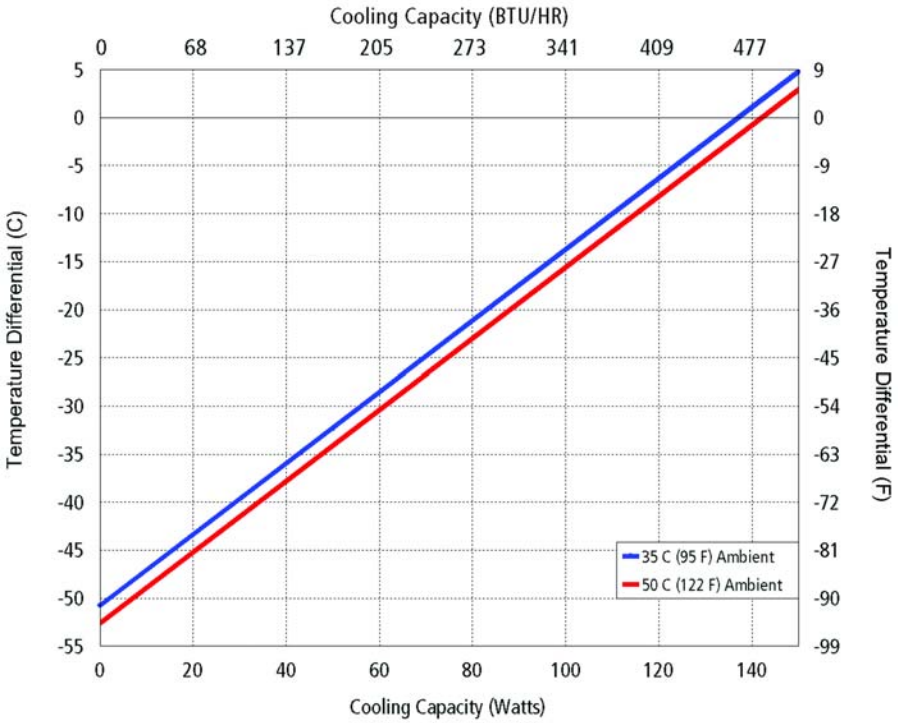

Equation of Line: y=ΔT(°C) x=Capacity (Watts)		
Ambient Temp	**35°C**	**50°C**
AHP-690	y=.37x-50.7	y=.37x-52.6

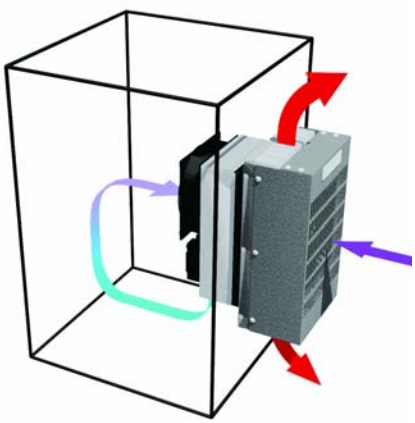

Air Flow Pattern

DIMENSIONS

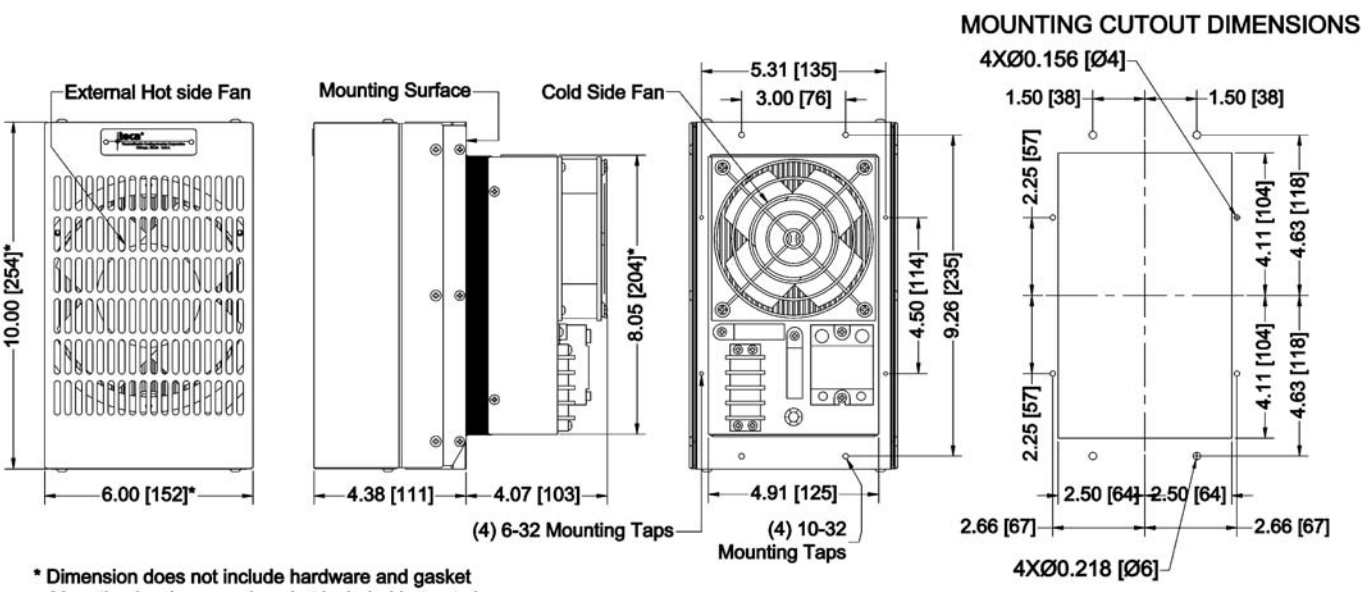

* Dimension does not include hardware and gasket
Mounting hardware and gasket included but not shown
Dimensions: Inches [Millimeters]